halliday
baillie

HB 690/35

SLIDING DOOR PRIVACY SET - 2.17" BACKSET (1.38"-1.5")

The iconic Halliday+Baillie HB 690/35 sliding door privacy set features an integrated push button-activated edge pull for pocketed doors. The operable "snib" (a slide block that acts like a traditional thumb turn) slides upwards to engage the lock. The discrete emergency release indicator pull can be operated with a pen or other object to disengage the lock from the outside.

The HB 690/35 version uses a standard lock body with shallower flush pull to suit 1.38"-1.5" doors. In double door conditions, for the passive leaf specify the HB 697 Strike Body w/Edge Pull and add Flush Pulls where a matching face plate is required.

Backset : 2.17"
Minimum door thickness HB 690/35 : 1.38"
Flush pulls : 6.9" x 1.42" x 0.47"
Internal grip depth : 0.43"

Suitable for timber or wide profile aluminium doors

Standard HB 690/35 set includes :
- HB 690 Series Lock Body
- Two HB 660/35 Flush Pulls
- HB 604 Fixing Kits (one set for HB 693)
- Strike and Dust Box
- Two spindle lengths (please specify door thickness)
- Fasteners

Configurations :
HB690/35 : Privacy Set, Snib Inside, ER Indicator Outside
HB692/35 : Snib Inside, Blank Outside
HB693/35 : Snib Inside, No Pull Outside
HB694/35 : Snib both Sides
HB691 : Body Only no End Pulls
HB697 : Body + End Pull, no Bolt

Available in all standard Halliday + Baillie finishes, see finishes sheet for further details.

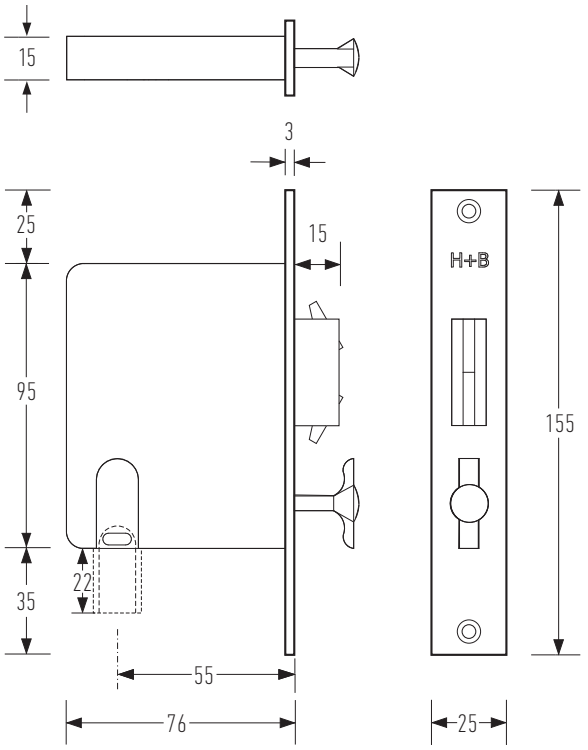

Snib Indicator

dustbox and strike plate

To be used with the HB 604
Timber fixing Kit on timber doors

Designed and manufactured in New Zealand. For more information on this product and others please visit www.hallidaybaillie.com. For dealers in North America, contact Bridgeport Worldwide +1-800-362-1484 www.BridgeportWorldwide.com/hallidaybaillie. All information subject to change.

© 2021 v2 Halliday + Baillie Ltd.